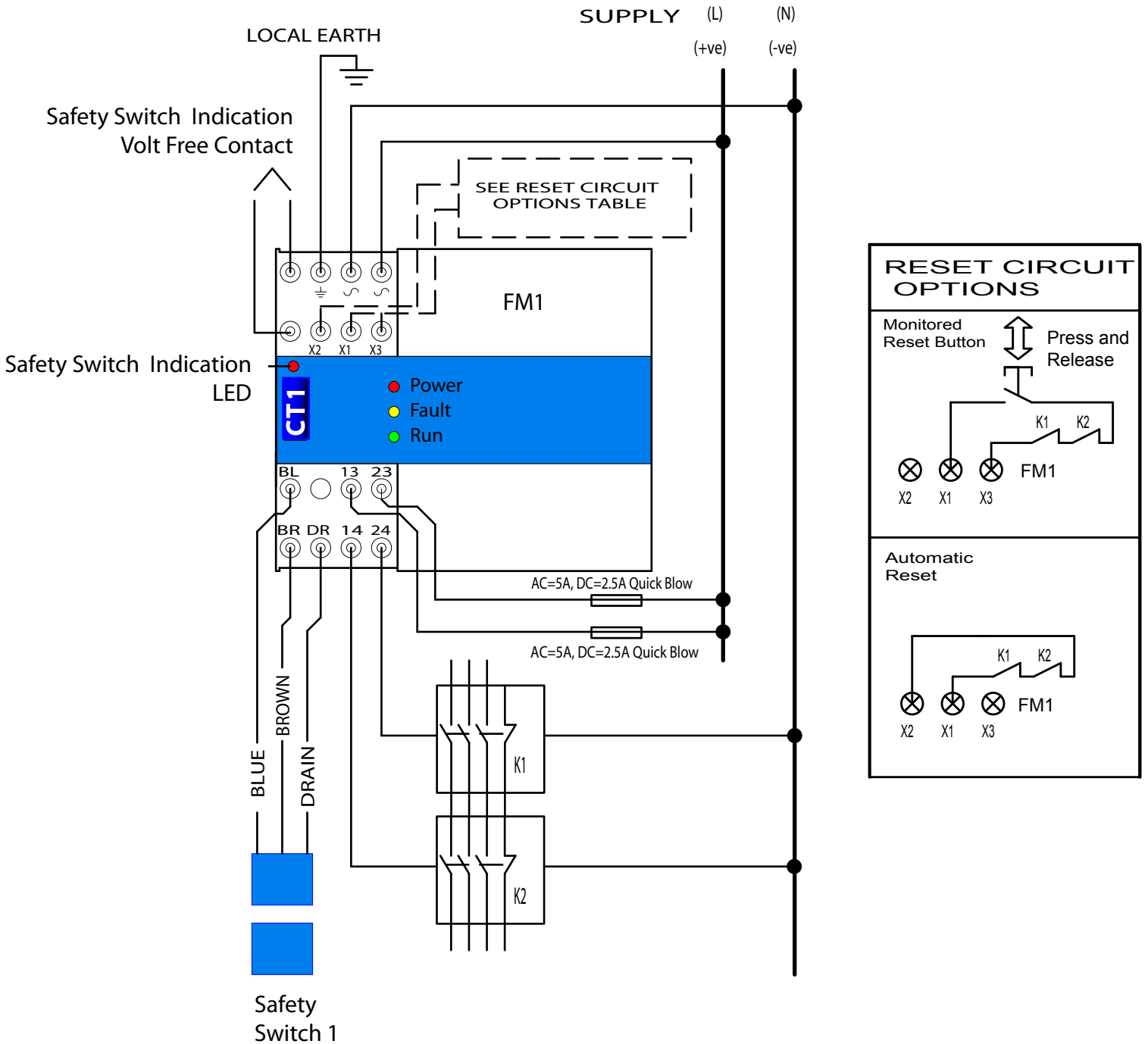
SUPPLY
(L)
(N)
(+ve)
(-ve)
LOCAL EARTH
Safety Switch Indication
Volt Free Contact
SEE RESET CIRCUIT
OPTIONS TABLE
FM1
X2
X1
X3
Safety Switch Indication
LED
CT1
Power
Fault
Run
BL
13
23
BR
DR
14
24
AC=5A, DC=2.5A Quick Blow
AC=5A, DC=2.5A Quick Blow
BROWN
BLUE
DRAIN
K1
K2
Safety
Switch 1

RESET CIRCUIT
OPTIONS
Monitored
Reset Button
Press and
Release
K1
K2
FM1
X2
X1
X3
Automatic
Reset
K1
K2
FM1
X2
X1
X3